FLOWSERVE

TECHNICAL BULLETIN

Valtek ShearStream HP Control Valves
Segmented V-Port Ball Valves

FCD VLENTB0027-13 10/07

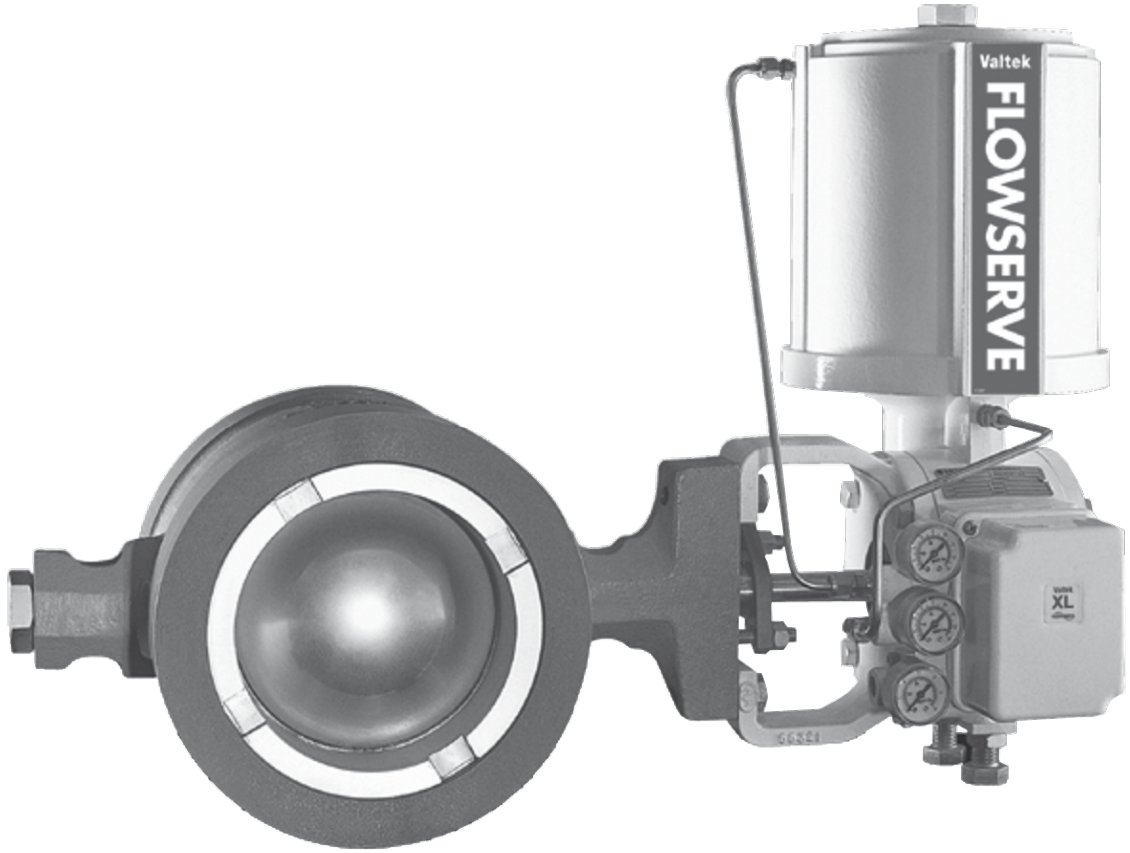

Experience In Motion

Control Valves

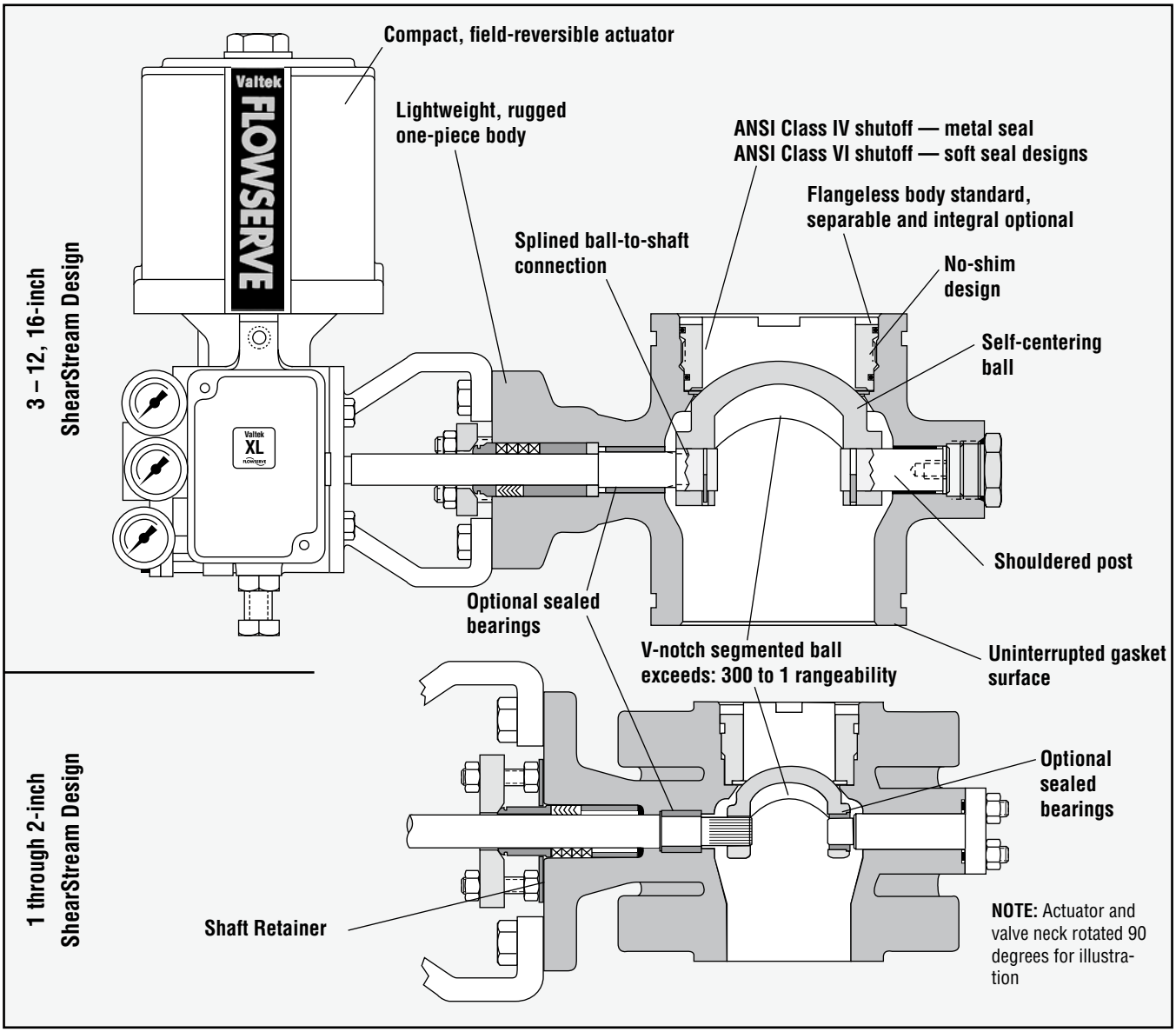

Figure 1: ShearStream Design

"Rugged" describes the Valtek® ShearStream™ ball valve. Designed to overcome the problems of harsh, particle entrained processes, ShearStream also provides accurate, reliable control in a broad range of applications, such as chemical, power and petroleum.

ShearStream addresses and solves many long-standing challenges faced by traditional ball valves, such as:

- Piping forces that unevenly load the seal
- Low rangeability due to limited orifice characterization
- Unsatisfactory shutoff capabilities

ShearStream achieves Class IV shutoff with a metal seal and Class VI with soft seal. A spring-loaded heavy duty seat is available for high pressure applications in metal and soft seat configurations. In addition to the standard wafer body design, ShearStream is available with separable or integral flanges. ShearStream is available in sizes 1 through 12 and 16-inch, ANSI Classes 150, 300, and 600, and in stainless steel, carbon steel and other alloys. The following page lists many important features and options which ShearStream uses to fulfill these and other requirements for ruggedness and high-performance.

Features and Advantages

ShearStream utilizes numerous features for ruggedness and high performance:

Features	Advantages
One-piece body	High performance ensured regardless of flange torque loads Seal tightness not altered by piping forces, as in two-piece bodies One leak path eliminated
Segmented V-notch ball	Clogging reduced "V" shaped orifice exceeds 300:1 rangeability Excellent shearing action in fibrous fluid mediums
Tight shut-off seats	Metal seal provides greater than ANSI Class IV shutoff Soft seals achieve ANSI Class VI shutoff
Self-centering ball	Seal installation improved and simplified Shutoff further improved
No-shim seal	Servicing and installation problems reduced
Thick-walled retainer	Valve's normal service life extended in erosive environments
Flangeless design standard	Reduced cost
Separable flange option	Bolt length reduced, avoiding bolt stretch and leakage in event of fire Flange bolting aligns easier Reduced cost with alloys
Integral flange option	Bolt length reduced, avoiding bolt stretch and leakage in event of fire

ShearStream has additional features for increased performance and serviceability:

Interchangeability	Standard face-to-face dimensions allow for easy field retrofitting of other manufactuers product lines Actuator is interchangeable with Valtek Valdisk™ eccentric disc valve
Seal replaceable without removing ball and shaft	Maintenance is fast and easy
Shaft serviceable from outboard end of ball (3 – 12, 16-inch only)	The need for actuator removal to replace ball and shaft is eliminated Shaft protected from blowout
Full, uninterrupted gasket surface	Gasket alignment problems reduced Wider range of gaskets possible, including spiral-wound

ShearStream also capitalizes on established features of Valtek quality:

Double acting, cylinder actuator	High-thrust, compact, lightweight Actuator fully interchangeable with Valdisk rotary valve actuator Actuator air pressures allowable up to 150 psi / 1034 kPa
Modular spool-type, four-way positioner	Calibration and maintenance are simple Convertible between pneumatic and electro-pneumatic
Clamped splined shaft	Extra strength provided with no lost motion or dead band
Available in variety of materials	Materials include carbon steel, 316 stainless steel and other alloys

Each ShearStream feature contributes to a product measurably superior to other ball valves, as illustrated by the following pages which contain additional information and specifications.

Seat Design Options

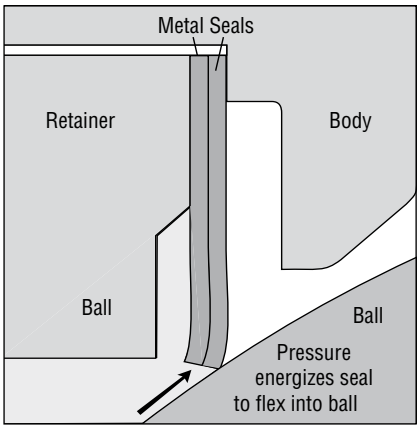

Figure 2: Metal seat: shaft downstream

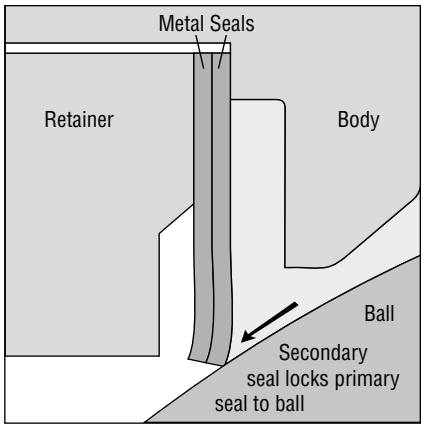

Figure 3: Metal seat: shaft Upstream

Metal Seat

The metal seat uses the pressure drop across the seal to enhance its shutoff characteristics in the shaft downstream flow direction. And in the shaft upstream direction the second metal seal locks the primary seal to the ball. In both cases the flexible seal conforms to the surface of the ball. As differential pressure increases, the metal seat uses the pressure to increase sealing force.
Shut-off: ANSI Class IV

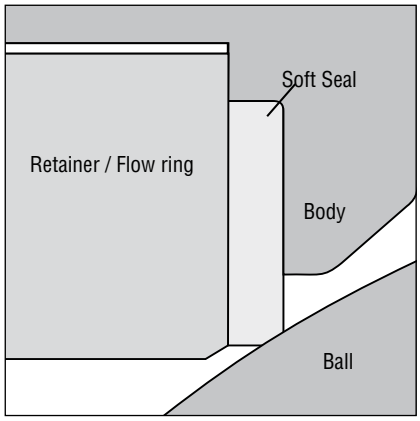

Figure 4: Soft seat and flow ring

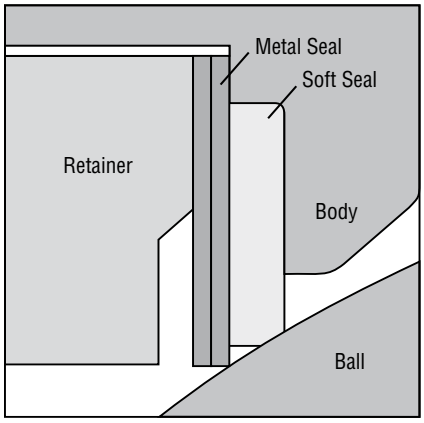

Figure 5: Dual

Soft Seat

The soft seat utilizes PTFE or PEEK soft seal. The soft seat is also available with a metal back-up seal in the dual seat configuration for fire-safe applications.
Shut:-off: ANSI Class VI

Hardened flow ring design is available without a soft seal for severe applications. The seat groove in the body is removed.
Shut-off: ANSI Class II approx.

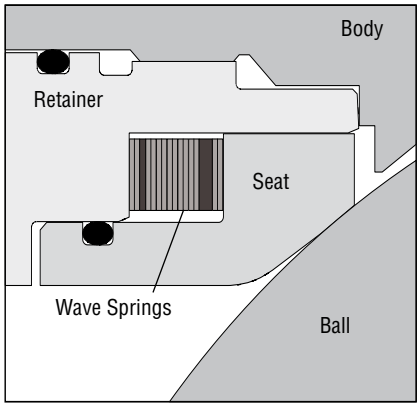

Figure 6: Heavy duty metal seat

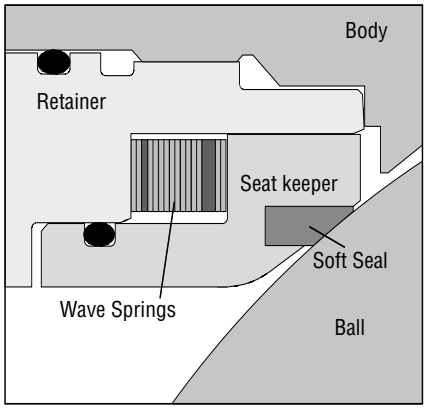

Figure 7: Heavy duty soft seat

Heavy Duty Seat

For applications requiring high pressure drops, the heavy duty seat provides tight shut-off and reliability in the shaft downstream flow direction. The sealed wave springs give the seat consistent seating pressure that is long-lasting. Optional o-ring available to seal wave springs for dirty service applications. The soft seat utilizes a UHMWPE or PTFE or PEEK soft seal.
Shut-off: Metal, ANSI Class IV
Soft, ANSI Class VI

Specifications

Table I: Material Selection

Part	Material
Body	Carbon Steel, 316 SS, 316L SS, 304 SS, 304L SS, Monel, Hastelloy C, Hastelloy B/B-3, Alloy 20, Titanium
Ball	Chrome Plated 317 SS, Alloy 6 Facing, Chrome Plated 316L SS, Chrome Plated 304 SS, Chrome Plated 304L SS, Hastelloy C, Monel, Nickel Plated 317 SS, Alloy 20, Hastelloy B/B-3, Titanium
Shaft / Pin	17-4 PH, Nitronic 50, Nitonic 50/Alloy 6, Hastelloy C, K-Monel, Alloy 20, Hastelloy B/B-3, Titanium
Bearings	MBT, Alloy 6, Ultimet
Seat Ring	316 SS, Inconel, Alloy 6
Soft Seat	Glass filled PTFE, PEEK, TEFZEL®, UHMWPE
Packing	PTFE V-Ring, QuickSet 9001®, AFPI, SafeGuard, Sure-Guard, SureGuard XT, 1303 FEP®, Graphite Rib/Braid, TFE/Glass V-Ring
Seat Retainer	Chrome Plated 316L SS, 316 SS w/Stellite, Chrome Plated 316L SS, 316L w/Alloy 6, Chrome Plated 304 SS, Chrome Plated 304L SS, Monel, Hastelloy C, Alloy 6, Hastelloy B/B-3, Titanium,
End Plug	Carbon Steel, 316 SS, 316L SS, 304 SS, 304L SS, Alloy 20, Hastelloy C, Hastelloy B/B-3, Monel, Titanium
End Seal	Viton O-Ring, Graphite
Yoke Bolting	Carbon Steel, Stainless Steel

Table II: Flow Coefficients
(Ball rotated 90°)

Body Size (inch)	C_v 90° Rotation	
	Shaft Downstream	Shaft Upstream
1	24	25
1.5	50	51
2	104	107
3	275	272
4	445	444
6	844	836
8	1338	1370
10	2710	2702
12	4150	4150
16	7150	7120

Table III: Seat Configurations

Seat Type	Description	Shaft Orientation	ANSI Class Shut-off
Metal	Two metal seat rings1	Upstream or Downstream	IV
Soft	One soft seat	Upstream	VI
		Downstream	IV
Dual	One soft seat plus two metal backup seats1	Upstream	VI
		Downstream	IV
Heavy Duty, Metal	Spring loaded metal seal	Downstream	IV
Heavy Duty, Soft	Spring loaded soft seal	Downstream	VI
Flow Ring	No seat	Upstream or Downstream	II

Note:

1. For sizes 1” and 1.5” there is only one metal seat ring.
2. Flow rings are not intended for application operating close to the seat. Leakage when fully closed is approximately ANSI class II.

Table IV: Maximum Allowable Shut-off Pressure Drops (psi/bar)

Flow Direction: Shaft Upstream1								
Valve Size	Seat	Bearing	Temperature Range (°F/°C)					
			-50/-46 to 100/38	200/93	300/149	400/204	500/260	600/316
1	Metal	MBT	740 / 51	600 / 41	490 / 34	375 / 26	- - -	- - -
		Ultimet	925 / 64	875 / 60	825 / 57	750 / 52	650 / 45	500 / 35
	Soft[2] / Dual[2]	MBT	740 / 51	600 / 41	400 / 28	- - -	- - -	- - -
		Ultimet	925 / 64	600 / 41	400 / 28	- - -	- - -	- - -
	Flow Ring[4]	MBT	740 / 51	600 / 41	490 / 34	375 / 26	- - -	- - -
		Ultimet	925 / 64	875 / 60	825 / 57	750 / 52	650 / 45	500 / 35
1.5	Metal	MBT	635 / 44	600 / 41	490 / 34	375 / 26	- - -	- - -
		Ultimet	635 / 44	610 / 42	585 / 40	555 / 38	530 / 37	500 / 35
	Soft[2] / Dual[2]	MBT	615 / 42	600 / 41	400 / 28	- - -	- - -	- - -
		Ultimet	615 / 42	600 / 41	400 / 28	- - -	- - -	- - -
	Flow Ring[4]	MBT	635 / 44	600 / 41	490 / 34	375 / 26	- - -	- - -
		Ultimet	635 / 44	610 / 42	585 / 40	555 / 38	530 / 37	500 / 35
2	Metal	MBT	400 / 28	400 / 28	395 / 27	375 / 26	- - -	- - -
		Ultimet	400 / 28	400 / 28	395 / 27	395 / 27	385 / 27	365 / 25
	Soft[2] / Dual[2]	MBT	465 / 32	445 / 31	400 / 28	- - -	- - -	- - -
		Ultimet	465 / 32	445 / 31	400 / 28	- - -	- - -	- - -
	Flow Ring[4]	MBT	465 / 32	445 / 31	425 / 29	375 / 26	- - -	- - -
		Ultimet	465 / 32	445 / 31	425 / 29	395 / 27	385 / 27	365 / 25
3	Metal	MBT	590 / 41	575 / 40	490 / 34	375 / 26	- - -	- - -
		Ultimet	590 / 41	575 / 40	565 / 39	555 / 38	540 / 37	530 / 37
	Soft[2] / Dual[2]	MBT	350 / 24	350 / 24	350 / 24	- - -	- - -	- - -
		Ultimet	350 / 24	350 / 24	350 / 24	- - -	- - -	- - -
	Flow Ring[4]	MBT	740 / 51	600 / 41	490 / 34	375 / 26	- - -	- - -
		Ultimet	925 / 64	875 / 60	825 / 57	750 / 52	650 / 45	500 / 35
4	Metal	MBT	160 / 11	150 / 10	130 / 9	120 / 8	- - -	- - -
		Ultimet	160 / 11	150 / 10	130 / 9	120 / 8	110 / 8	90 / 6
	Soft[2] / Dual[2]	MBT	280 / 19	280 / 19	275 / 19	- - -	- - -	- - -
		Ultimet	280 / 19	280 / 19	275 / 19	- - -	- - -	- - -
	Flow Ring[4]	MBT	740 / 51	600 / 41	490 / 34	375 / 26	- - -	- - -
		Ultimet	925 / 64	875 / 60	825 / 57	750 / 52	650 / 45	500 / 35
6	Metal	MBT	250 / 17	240 / 17	230 / 16	220 / 15	- - -	- - -
		Ultimet	250 / 17	240 / 17	230 / 16	220 / 15	210 / 14	200 / 14
	Soft[2] / Dual[2]	MBT	270 / 19	265 / 18	260 / 18	- - -	- - -	- - -
		Ultimet	270 / 19	265 / 18	260 / 18	- - -	- - -	- - -
	Flow Ring[4]	MBT	740 / 51	600 / 41	490 / 34	375 / 26	- - -	- - -
		Ultimet	925 / 64	875 / 60	825 / 57	750 / 52	650 / 45	500 / 35
8	Metal	MBT	220 / 15	210 / 14	200 / 14	190 / 13	- - -	- - -
		Ultimet	220 / 15	210 / 14	200 / 14	190 / 13	180 / 12	180 / 12
	Soft[2] / Dual[2]	MBT	280 / 19	275 / 19	270 / 19	- - -	- - -	- - -
		Ultimet	280 / 19	275 / 19	270 / 19	- - -	- - -	- - -
	Flow Ring[4]	MBT	740 / 51	600 / 41	490 / 34	375 / 26	- - -	- - -
		Ultimet	925 / 64	875 / 60	825 / 57	750 / 52	650 / 45	500 / 35
10	Metal	MBT	90 / 6	80 / 6	80 / 6	70 / 5	- - -	- - -
		Ultimet	90 / 6	80 / 6	80 / 6	70 / 5	60 / 4	60 / 4
	Soft[2] / Dual[2]	MBT	275 / 19	270 / 19	265 / 18	- - -	- - -	- - -
		Ultimet	275 / 19	270 / 19	265 / 18	- - -	- - -	- - -
	Flow Ring[4]	MBT	740 / 51	600 / 41	490 / 34	375 / 26	- - -	- - -
		Ultimet	925 / 64	875 / 60	825 / 57	750 / 52	650 / 45	500 / 35
12	Metal	MBT	70 / 5	60 / 4	60 / 4	60 / 4	- - -	- - -
		Ultimet	70 / 5	60 / 4	60 / 4	60 / 4	60 / 4	50 / 3
	Soft[2] / Dual[2]	MBT	280 / 19	280 / 19	275 / 19	- - -	- - -	- - -
		Ultimet	280 / 19	280 / 19	275 / 19	- - -	- - -	- - -
	Flow Ring[4]	MBT	740 / 51	600 / 41	490 / 34	375 / 26	- - -	- - -
		Ultimet	925 / 64	875 / 60	825 / 57	750 / 52	650 / 45	500 / 35

Notes: 1 All shafts are 17-4PH or Inconel.
2 Soft and Dual seats are rated to ANSI/FCI Class VI shut-off for the shaft upstream flow direction and Class IV shut-off for the shaft downstream flow direction.
3 Heavy Duty seat values are for both the metal and soft Heavy Duty seat versions. Heavy Duty soft max temp is 400 F.
4 Flow Ring allowable pressure drops are the same in either flow direction. Flow rings should not be used for shut-off.

Table V: Maximum Allowable Shut-off Pressure Drops (psi/bar)

Flow Direction: Shaft Downstream1								
Valve Size	Seat	Bearing	Temperature Range (°F/°C)					
			-50/-46 to 100/38	200/93	300/149	400/204	500/260	600/316
1	Metal	MBT	740 / 51	600 / 41	490 / 34	375 / 26	- - -	- - -
		Ultimet	925 / 64	875 / 60	825 / 57	750 / 52	650 / 45	500 / 35
	Soft[2] / Dual[2]	MBT	740 / 51	600 / 41	400 / 28	- - -	- - -	- - -
		Ultimet	925 / 64	600 / 41	400 / 28	- - -	- - -	- - -
	Heavy Duty[3]	MBT	740 / 51	600 / 41	490 / 34	375 / 26	- - -	- - -
		Ultimet	925 / 64	875 / 60	825 / 57	750 / 52	- - -	- - -
1.5	Metal	MBT	615 / 42	590 / 41	490 / 34	375 / 26	- - -	- - -
		Ultimet	615 / 42	590 / 41	565 / 39	535 / 37	510 / 35	485 / 33
	Soft[2] / Dual[2]	MBT	615 / 42	590 / 41	400 / 28	- - -	- - -	- - -
		Ultimet	615 / 42	590 / 41	400 / 28	- - -	- - -	- - -
	Heavy Duty[3]	MBT	615 / 42	590 / 41	490 / 34	375 / 26	- - -	- - -
		Ultimet	615 / 42	590 / 41	565 / 39	535 / 37	- - -	- - -
2	Metal	MBT	395 / 27	285 / 20	265 / 18	240 / 17	- - -	- - -
		Ultimet	395 / 27	285 / 20	265 / 18	240 / 17	200 / 14	160 / 11
	Soft[2] / Dual[2]	MBT	445 / 31	425 / 29	400 / 28	- - -	- - -	- - -
		Ultimet	445 / 31	425 / 29	400 / 28	- - -	- - -	- - -
	Heavy Duty[3]	MBT	445 / 31	425 / 29	405 / 28	375 / 26	- - -	- - -
		Ultimet	445 / 31	425 / 29	405 / 28	385 / 27	- - -	- - -
3	Metal	MBT	370 / 26	350 / 24	330 / 23	310 / 21	- - -	- - -
		Ultimet	370 / 26	350 / 24	330 / 23	310 / 21	295 / 20	280 / 19
	Soft[2] / Dual[2]	MBT	240 / 17	240 / 17	235 / 16	- - -	- - -	- - -
		Ultimet	240 / 17	240 / 17	235 / 16	- - -	- - -	- - -
	Heavy Duty[3]	MBT	740 / 51	600 / 41	490 / 34	375 / 26	- - -	- - -
		Ultimet	925 / 64	875 / 60	825 / 57	750 / 52	- - -	- - -
4	Metal	MBT	235 / 16	230 / 16	225 / 16	220 / 15	- - -	- - -
		Ultimet	235 / 16	230 / 16	225 / 16	220 / 15	215 / 15	210 / 14
	Soft[2] / Dual[2]	MBT	185 / 13	180 / 12	180 / 12	- - -	- - -	- - -
		Ultimet	185 / 13	180 / 12	180 / 12	- - -	- - -	- - -
	Heavy Duty[3]	MBT	740 / 51	600 / 41	490 / 34	375 / 26	- - -	- - -
		Ultimet	925 / 64	875 / 60	825 / 57	750 / 52	- - -	- - -
6	Metal	MBT	245 / 17	240 / 17	235 / 16	230 / 16	- - -	- - -
		Ultimet	245 / 17	240 / 17	235 / 16	230 / 16	225 / 16	220 / 15
	Soft[2] / Dual[2]	MBT	180 / 12	175 / 12	175 / 12	- - -	- - -	- - -
		Ultimet	180 / 12	175 / 12	175 / 12	- - -	- - -	- - -
	Heavy Duty[3]	MBT	740 / 51	600 / 41	490 / 34	375 / 26	- - -	- - -
		Ultimet	925 / 64	875 / 60	825 / 57	750 / 52	- - -	- - -
8	Metal	MBT	260 / 18	245 / 17	230 / 16	220 / 15	- - -	- - -
		Ultimet	260 / 18	245 / 17	230 / 16	220 / 15	210 / 14	200 / 14
	Soft[2] / Dual[2]	MBT	180 / 12	175 / 12	175 / 12	- - -	- - -	- - -
		Ultimet	180 / 12	175 / 12	175 / 12	- - -	- - -	- - -
	Heavy Duty[3]	MBT	610 / 42	580 / 40	490 / 34	375 / 26	- - -	- - -
		Ultimet	610 / 42	580 / 40	550 / 40	515 / 36	- - -	- - -
10	Metal	MBT	185 / 13	180 / 12	180 / 12	175 / 12	- - -	- - -
		Ultimet	185 / 13	180 / 12	180 / 12	175 / 12	175 / 12	170 / 12
	Soft[2] / Dual[2]	MBT	120 / 8	115 / 8	115 / 8	- - -	- - -	- - -
		Ultimet	120 / 8	115 / 8	115 / 8	- - -	- - -	- - -
	Heavy Duty[3]	MBT	560 / 39	535 / 37	490 / 34	375 / 26	- - -	- - -
		Ultimet	560 / 39	535 / 37	505 / 35	475 / 33	- - -	- - -
12	Metal	MBT	140 / 10	140 / 10	135 / 9	130 / 9	- - -	- - -
		Ultimet	140 / 10	140 / 10	135 / 9	130 / 9	130 / 9	125 / 9
	Soft[2] / Dual[2]	MBT	85 / 6	85 / 6	80 / 6	- - -	- - -	- - -
		Ultimet	85 / 6	85 / 6	80 / 6	- - -	- - -	- - -
	Heavy Duty[3]	MBT	740 / 51	600 / 41	490 / 34	375 / 26	- - -	- - -
		Ultimet	925 / 64	875 / 60	825 / 57	750 / 52	- - -	- - -

Dimensions

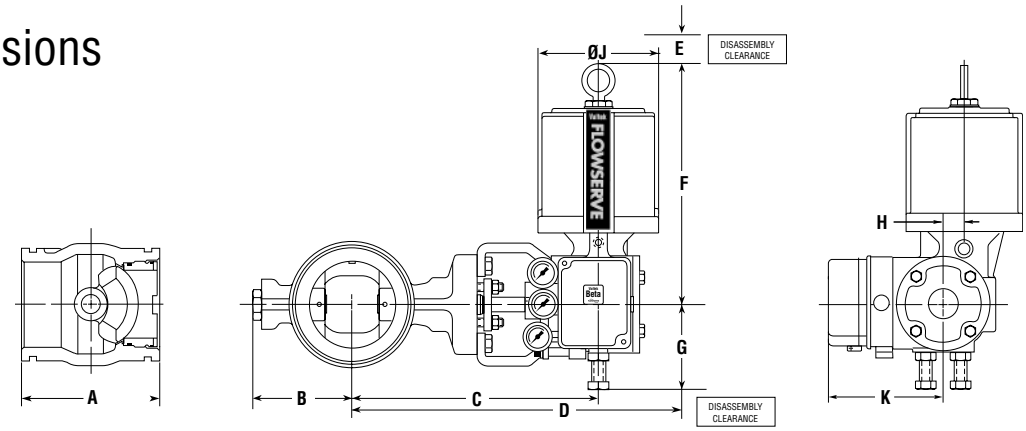

Table VI: ShearStream Dimensions (inches/mm)

Body Classes 150, 300, 600 (with Class 150 or 300 ball and shaft

Valve Size	Actuator SIze*	Spline Size*	A		B		C		D		E		F		G		H		J		K	
1	25	0.44	4.00	101.6	3.3	85	10.6	269	21.2	538	5.3	135	13.3	338	4.5	114	1.1	28	6.5	165	6.5	165
1.5	25	0.62	4.50	114.3	3.9	99	11.1	282	21.7	551	5.3	135	13.3	338	4.5	114	1.1	28	6.5	165	6.5	165
2	25	0.62	4.94	125.5	4.3	109	11.4	290	22.0	559	5.3	135	13.3	338	4.5	114	1.1	28	6.5	165	6.5	165
3	25	0.75	6.50	165.1	5.0	127	12.5	318	23.1	587	5.3	135	13.3	338	4.5	114	1.1	28	6.5	165	6.5	165
	50	0.75	6.50	165.1	5.0	127	12.5	318	23.3	592	7.5	191	18.3	465	5.8	147	2.0	51	9.1	231	7.4	188
4	25	0.75	7.62	193.5	5.5	140	13.7	348	24.3	617	5.3	135	13.3	338	4.5	114	1.1	28	6.5	165	6.5	165
	50	0.75	7.62	193.5	5.5	140	13.7	348	24.5	622	7.5	191	18.3	465	5.8	147	2.0	51	9.1	231	7.4	188
6	25	0.88	9.00	228.6	7.9	201	15.9	404	26.5	673	5.3	135	13.3	338	4.5	114	1.1	28	6.5	165	6.5	165
	50	0.88	9.00	228.6	7.9	201	15.9	404	26.7	678	7.5	191	18.3	465	5.8	147	2.0	51	9.1	231	7.4	188
	100	0.88	9.00	228.6	7.9	201	15.9	404	30.2	767	8.5	216	22.9	582	7.5	191	2.4	61	12.5	318	8.4	213
8	50	0.88	9.62	244.3	8.7	221	16.7	424	33.5	851	7.5	191	18.3	465	5.8	147	2.0	51	9.1	231	7.4	188
	100	0.88	9.62	244.3	8.7	221	16.7	424	37.0	940	8.5	216	22.9	582	7.5	191	2.4	61	12.5	318	8.4	213
10	50	1.12	11.70	297.2	11.0	279	17.7	450	28.5	724	7.5	191	18.3	465	5.8	147	2.0	51	9.1	231	7.4	188
	100	1.12	11.70	297.2	11.0	279	17.7	450	32.0	813	8.5	216	22.9	582	7.5	191	2.4	61	12.5	318	8.4	213
	200	1.12	11.70	297.2	11.0	279	17.7	450	34.5	876	9.0	229	24.3	594	7.5	191	2.4	61	12.5	318	8.4	213
12	100	1.50	13.30	337.8	12.0	305	17.7	450	32.0	813	8.5	216	22.9	582	7.5	191	2.4	61	12.5	318	8.4	213
	200	1.50	12.30	337.8	12.0	305	17.7	450	34.5	876	9.0	229	24.3	594	7.5	191	2.4	61	12.5	318	8.4	213
16	100	1.75	15.80	400.0	16.6	422	26.1	663	42.0	1067	8.5	216	22.9	582	7.5	191	2.4	61	12.5	318	8.4	213
	200	1.75	15.80	400.0	16.6	422	26.1	663	44.5	1130	9.0	229	24.3	594	7.5	191	2.4	61	12.5	318	8.4	213

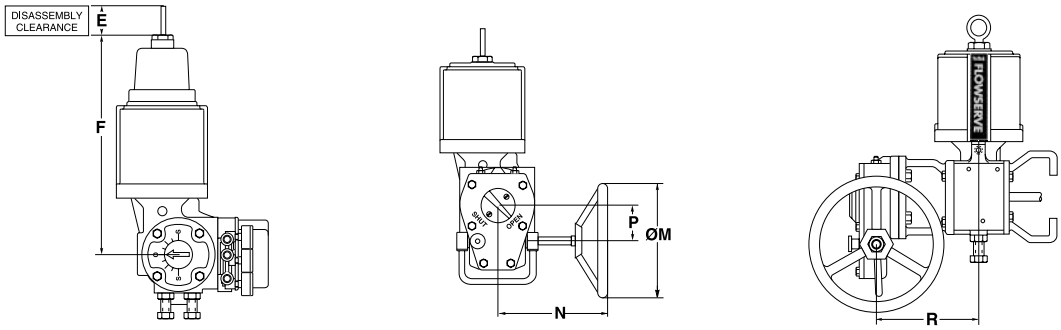

Table VII: Handwheel and Extended, Heavy-duty Spring Dimensions (inches/mm)

Actuator Size (sq. in.)	E		F		M		N		P		R	
25	9.3	236	17.3	439	10.0	254	9.8	149	2.6	66	7.4	188
50	9.8	249	23.8	605	12.0	305	10.3	262	3.4	86	10.1	257
100	8.5	216	23.0	584	18.0	457	13.3	338	5.4	137	9.7	246
200	9.0	229	24.3	617	18.0	457	13.3	338	5.4	137	9.7	246

Specifications

Table VIII: Estimated Shipping Weights with Standard Actuator and Positioner

Valve Size (inch)	Flangeless Body		Flanged Body*	
	(lbs.)	(kg.)	(lbs.)	(kg.)
1	41	19	47	22
1.5	45	21	55	25
2	47	22	59	27
3	61	28	80	36
4	80	36	111	50
6	146	66	197	89
8	186	84	266	121
10	278	126	400	181
12	496	225	653	296
16	908	412	1259	571

*Estimates based on Class 300 flanges.

Table IX: End Connections

Size (inch)	ANSI Class	End Connection
1	150 - 600	Integral, Flangeless
1.5	150 - 600	Integral, Flangeless
2	150	Integral, Flangeless
3	300 - 600	Integral*, Flangeless
4	150 - 600	Separable, Integral, Flangeless
6	150 - 600	Separable, Integral, Flangeless
8	150 - 600	Integral, Flangeless
10	150 - 600	Integral, Flangeless
12	150 - 600	Integral, Flangeless
16	150 - 600	Integral

*ShearStrem 2-inch, ANSI Class 300 - 600 integral flange bolt holes are threaded

Table X: Valve Actuator Compatibility

Actuator Size (sq. in.)	Spring Size	Valve Size (inch)									
		1	1.5	2	3	4	6	8	10	12	16
25	Standard	■	■	■	■	■	■				
	Extended	■	■	■	■	■	■				
50	Standard				■	■	■	■	■		
	Extended				■	■	■	■	■		
100	Standard						■	■	■	■	■
	Extended						■	■	■	■	■
200	Standard								■	■	■
	Extended								■	■	■

Table XI: Additional Specifications

Characteristic: Equal percent / Linear (characterization with positioner
Ball Rotation: Counterclockwise to open when viewed from actuator

ShearStream Sizing

Procedures and data to size ShearStream valves including determining actuator size, are contained in *Performance!* valve selection software.

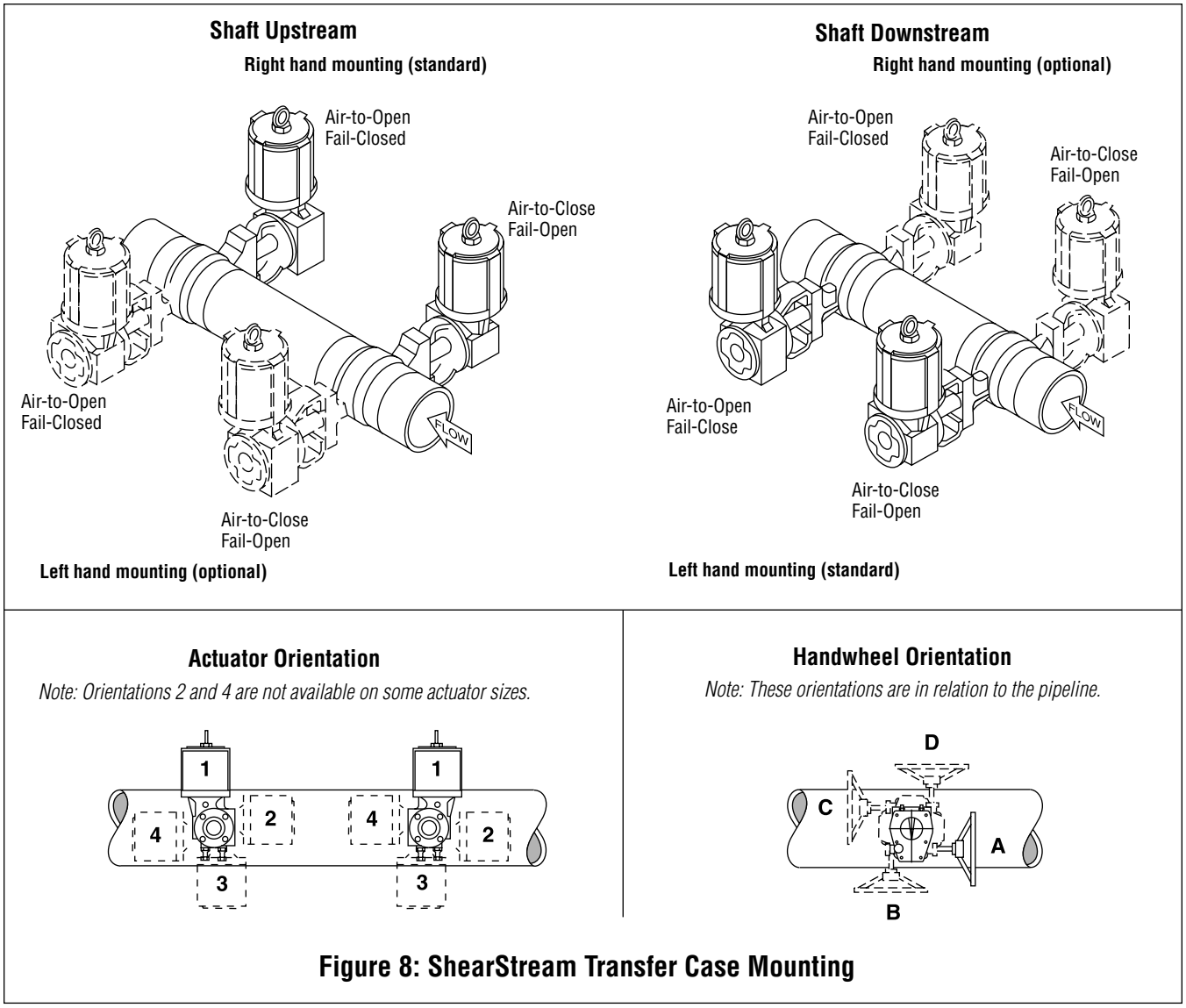

Figure 8: ShearStream Transfer Case Mounting

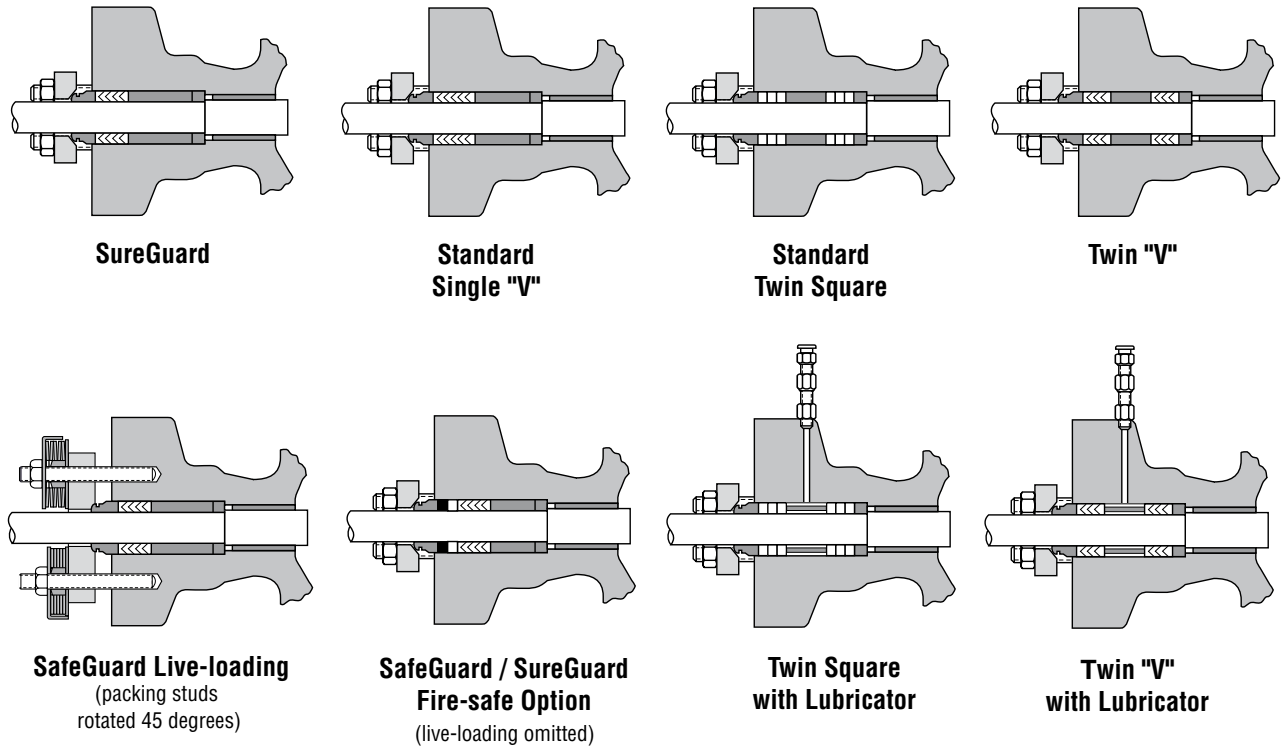

Figure 9: ShearStream Packing Configurations

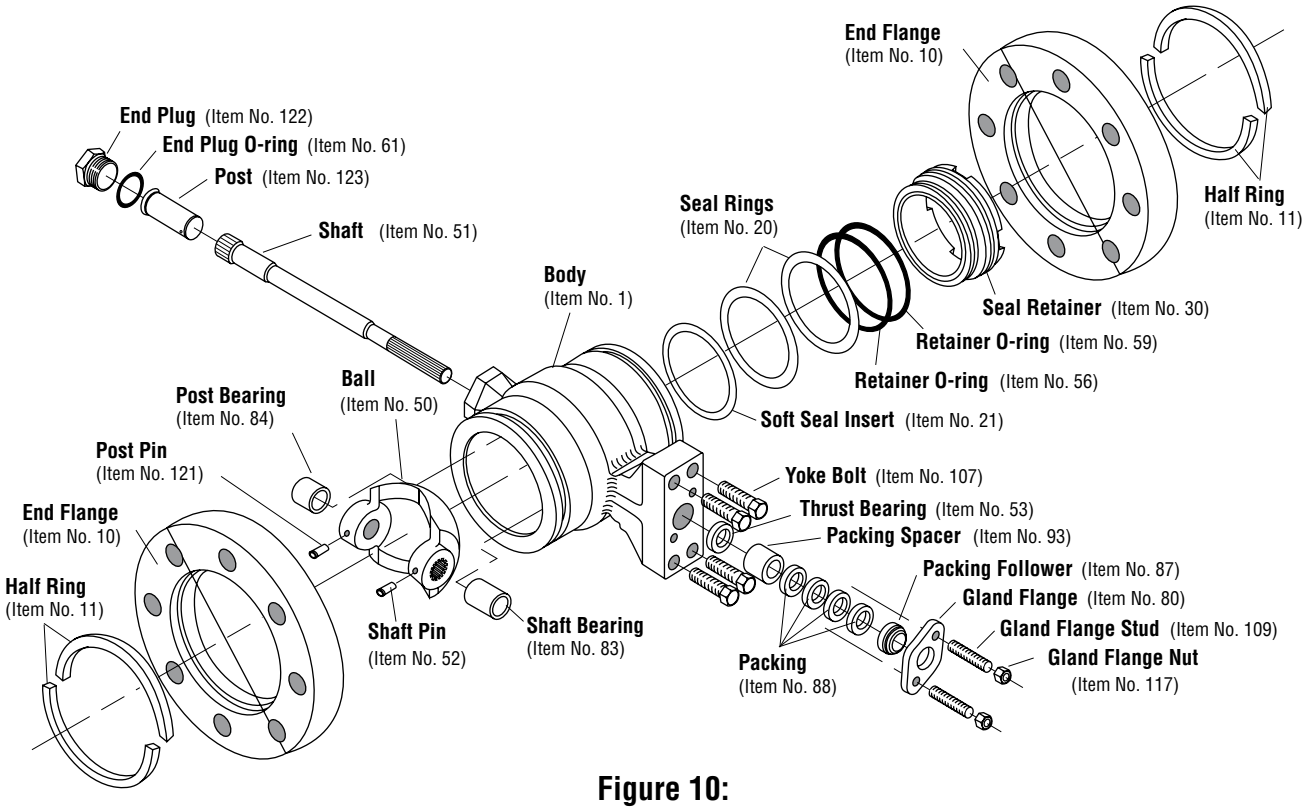

Figure 10:
Exploded Body Subassembly, 3 – 12-inch and 16-inch Rotating Post Design

NOTE: Item numbers correspond directly to the valve's bill of material. Refer to it for specific part numbers.

Flowserve Corporation has established industry leadership in the design and manufacture of its products. When properly selected, this Flowserve product is designed to perform its intended function safely during its useful life. However, the purchaser or user of Flowserve products should be aware that Flowserve products might be used in numerous applications under a wide variety of industrial service conditions. Although Flowserve can (and often does) provide general guidelines, it cannot provide specific data and warnings for all possible applications. The purchaser/user must therefore assume the ultimate responsibility for the proper sizing and selection, installation, operation and maintenance of Flowserve products. The purchaser/user should read and understand the Installation Operation Maintenance (IOM) instructions included with the product, and train its employees and contractors in the safe use of Flowserve products in connection with the specific application.
While the information and specifications presented in this literature are believed to be accurate, they are supplied for informative purposes only and should not be considered certified or as a guarantee of satisfactory results by reliance thereon. Nothing contained herein is to be construed as a warranty or guarantee, express or implied, regarding any matter with respect to this product. Because Flowserve is continually improving and upgrading its product design, the specifications, dimensions and information contained herein are subject to change without notice. Should any question arise concerning these provisions, the purchaser/user should contact Flowserve Corporation at any of its worldwide operations or offices.

To find your local Flowserve representative, visit **www.flowserve.com/SalesLocator**

NORWEGIAN DISTRIBUTOR:
Ellingsen NOR Instruments

ELLINGSEN NOR INSTRUMENTS

Haakon Ellingsen AS
P.O. Box 184, N-1309 Rud
Phone + 47 67151200
Fax +47 67151201
post@ellingsen.biz
www.ellingsen.biz

Flowserve and Valtek are registered trademarks of Flowserve Corporation.

FCD VLENTB027-13 10/07

©2007 Flowserve Corporation. Flowserve Corporation, Valtek Control Products, Tel. USA 801 489 8611

Flowserve Corporation
Flow Control
1350 N. Mt. Springs Parkway
Springville, UT 84663
USA
Phone: +1 801 489 8611
Fax: +1 801 489 3719

Flowserve (Austria) GmbH
Control Valves - Villach Operation
Kasernengasse 6
9500 Villach
Austria
Phone: +43 (0)4242 41181 0
Fax: +43 (0)4242 41181 50

Flowserve India Controls Pvt. Ltd
Plot # 4, 1A, E.P.I.P, Whitefield
Bangalore Kamataka
India 560 066
Phone: +91 80 284 10 289
Fax: +91 80 284 10 286

NAF AB
Gelbgjutaregatan 2
SE-581 87 Linköping
Sweden
Phone: +46 (0)13 31 61 00
Fax: +46 (0)13 13 60 54

Quick Response Centers

Flowserve Deer Park
5114 Railroad Street
Deer Park, TX 77536 USA
Phone: 281 479 9500
Fax: 281 479 8511

Flowserve Baton Rouge
12134 Industriplex Blvd
Baton Rouge, LA 70809
Phone: 225-751-9880
Fax: 255-755-0728

Flowserve Philadelphia
104 Chelsea Parkway
Boothwyn, PA 19061 USA
Phone: 610 497 8600
Fax: 610 497 6680

Flowserve Singapore
12 Tuas Aventue 20
Rep, of Singapore 638824
Phone: (65) 68-798-900
Fax: (65) 68-624-940

flowserve.com